dB ULTRASONIC TRANSDUCERS

Technical Specifications:

The dB Transducer Series is a range of non-contacting ultrasonic transducers for level, volume, and flow measurement. Available in a variety of models and compatible with all Pulsar controllers so that you have a specific solution to suit your application requirements.

PHYSICAL: TRANSDUCER SPECIFIC

Model:	Dimensions:	Dia Face:	Weight:	Measurement Range:	Frequency:	Beam Angle:
dB3	78 (D) mm x 115 (H) mm (3.07 in x 4.52 in)	19 mm (0.75 in)	1.1 kg (2.4 lb)	0.125 mm to 3 m (0.41 ft to 10 ft)	125kHz	<10°
dB6	86 (D) mm x 106 (H) mm (3.39 in x 4.17 in)	30 mm (1.18 in)	1.1 kg (2.4 lb)	0.3 mm to 6 m (0.98 ft to 20 ft)	75kHz	<10°
dBS6	86 (D) mm x 106 (H) mm (3.39 in x 4.17 in)	45 mm (1.78 in)	1.1 kg (2.4 lb)	0.2 mm to 6m (0.66 ft to 20 ft)	50kHz	<10°
dB10	86 (D) mm x 106 (H) mm (3.39 in x 4.17 in)	45 mm (1.78 in)	1.1 kg (2.4 lb)	0.3 mm to 10 m (0.98 ft to 33 ft)	50kHz	<10°
dB15	86 (D) mm x 122 (H) mm (3.39 in x 4.8 in)	60 mm (2.36 in)	1.2 kg (2.6 lb)	0.5 mm to 15 m (1.64 ft to 50 ft)	41kHz	<8°
dB25	105 (D) mm x 142 (H) mm (4.13 in x 5.59 in)	78 mm (3.07 in)	1.4 kg (3.1 lb)	0.6 mm to 25 m (1.97 ft to 82 ft)	30kHz	<6°
dB40	205 (D) mm x 223 (H) mm (8.07 in x 8.77 in)	160 mm (6.30 in)	6 kg (13.2 lb)	1.2 m to 40 m (3.94 ft to 130 ft)	20kHz	<5°
dB50	205 (D) mm x 223 (H) mm (8.07 in x 8.77 in)	160 mm (6.30 in)	6 kg (13.2 lb)	2 m to 50 m (6.56 ft to 164 ft)	20kHz	<5°

PHYSICAL: ALL TRANSDUCERS

Sensor Body Material:	Valox 357 U and syntactic foam face
Cable Lengths:	Standard = 5 m, 10 m, 20 m, or 30 m (16.4 ft, 32.8 ft, 65.6 ft, or 98.4 ft). Optional: up to 150 m (492 ft) maximum (increments of 10 m (32.8 ft) only)
Maximum Separation:	500 m (1,640 ft)
Mounting Connection:	BSP or 1" NPT

ENVIRONMENTAL

Enclosure Protection:	IP68 / NEMA 6P
Max. And Min. Temperature (Electronics):	Standard: -40° C to +90° C (-40° F to +194° F) Hazardous area versions: -40° C to +75° C (-40° F to +167° F)

APPROVALS

CE Approval:	2014/30/EU to EMC & 2014/34/EU ATEX Directives. Standards applied: EN 60079-0:2012+A11:2013/ EN 60079-11:2012 / EN 60079-18:2009 / EN 60079-26:2007 / EN 61326-1:2013
ATEX Approval:	Standard ATEX EEx m II T6 or optional EEx ia IIC T6. FM/FMC approval. (dB50 not approved)

PERFORMANCE

Accuracy:	0.25% or 6 mm (0.24 in) whichever is greater
Resolution:	0.01% or 2 mm (0.08 in) whichever is greater

TRANSDUCER OPTIONS

Model:	**dB3**	**dBs6**	**dB6**	**dB10**	**dB15**	**dB25**	**dB40**	**dB50**
PVDF		✓	✓	✓				
Front Threaded / PVDF	✓	✓	✓	✓				
Submergence Shield	✓	✓	✓	✓	✓	✓		
Flanged DIN/ANSI		✓	✓	✓	✓			
Foam Face		✓		✓	✓	✓	✓	✓
Sanitary Flange		✓	✓	✓				
Intrinsically Safe of All the Above	✓	✓	✓	✓	✓	✓	✓	✓

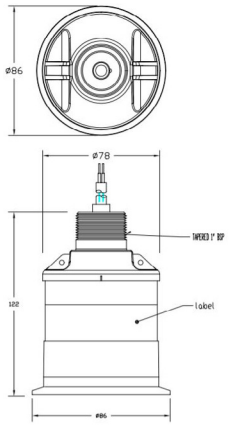

dB15 Transducer Drawing

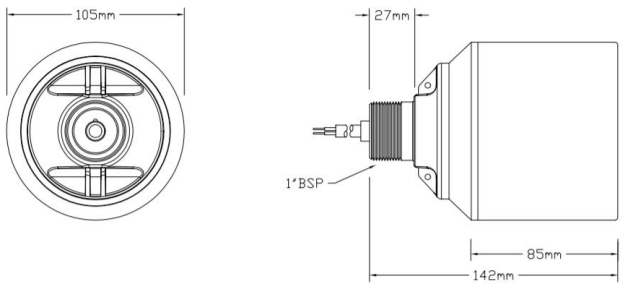

dB25 Transducer Drawing

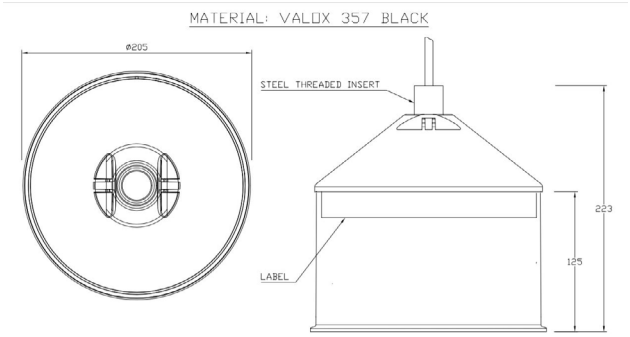

dB40 Transducer Drawing

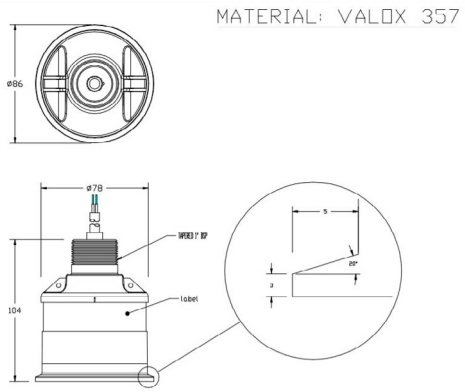

dB6 & dB10 Transducer Drawing

pulsar MEASUREMENT

INFO@PULSARMEASUREMENT.COM

Pulsar Measurement is a trading name of Pulsar Process Measurement, Ltd.

Copyright © 2020 Pulsar Measurement
Registered Address: 1 Chamberlain Square CS, Birmingham B3 3AX
Registered No.: 3345604 England & Wales

Delivering the Measure of Possibility

United States
11451 Belcher Road South
Largo, FL 33773

888-473-9546

Canada
16456 Sixsmith Drive
Long Sault, Ont. K0C 1P0

855-300-9151

United Kingdom
Cardinal Building, Enigma Commercial Centre
Sandy's Road, Malvern WR14 1JJ

+44 (0) 1684 891371

Rev 1.0